BWD / BWU – 15 Installation Details

Fixture Back

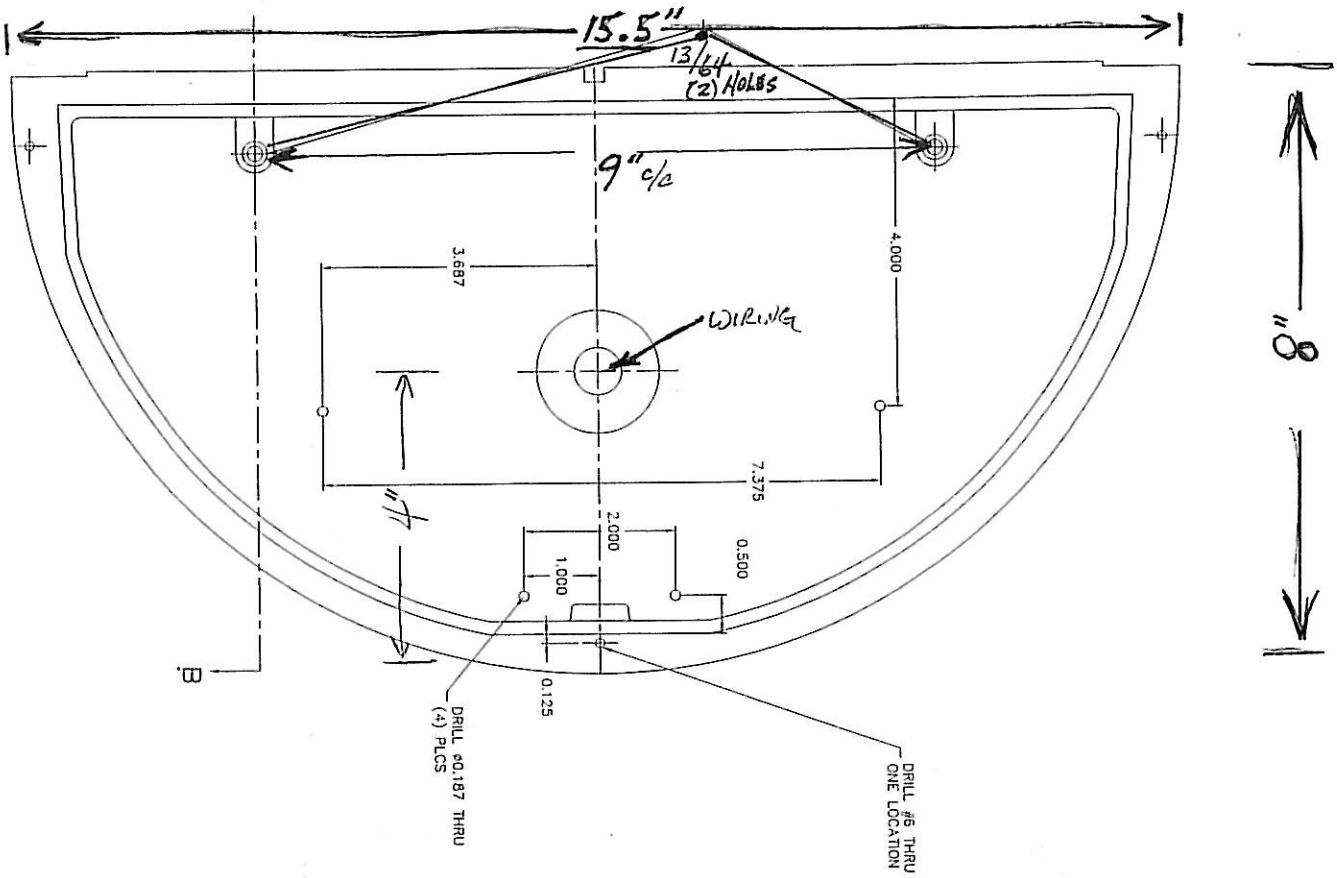

Fixture / Junction Box Mounting Plate

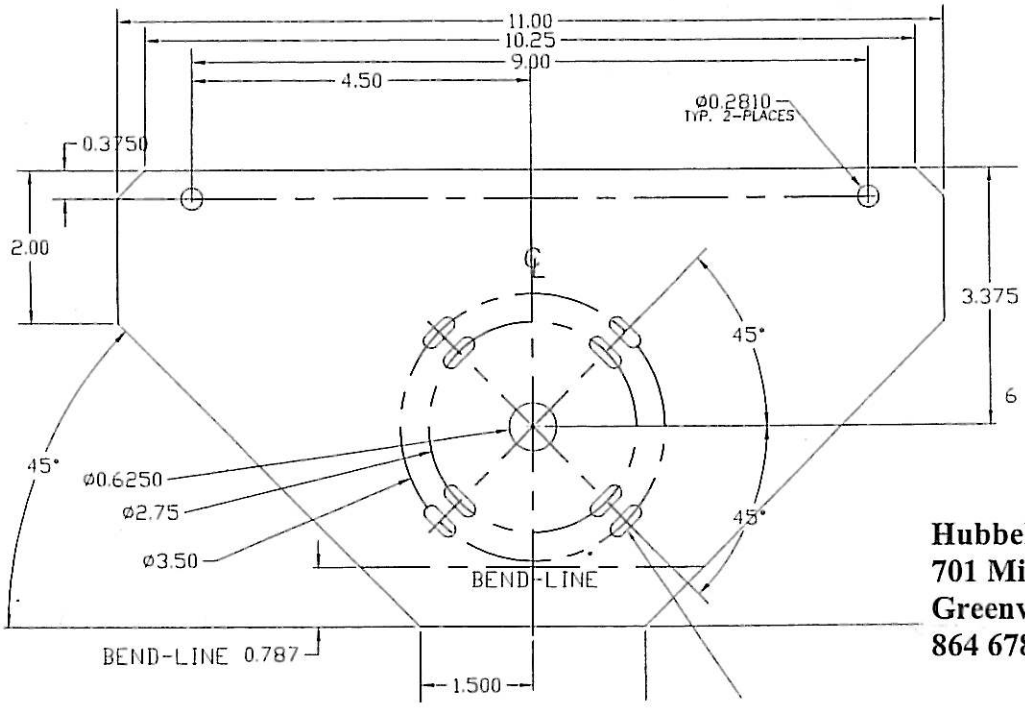

Hubbell Lighting Inc
701 Millennium Blvd
Greenville, SC 29607
864 678 1000